Convergence of Technologies to Enable A Smart City

Ethernet Switch Solutions focusing on multi-protocol integration to realize the Industrial Internet of Things

Shaping The Future Towards A Smart City

Enabling a smart city is an urban development utilizing Information and Communication Technology and Internet of Things.

It is also known as Eco-city with the purpose to improve the quality of urban mobility to manage several aspects such as in,

- Traffic and Transportation Systems
- Power Plants & Renewable Energy
- Water and Wastewater Management,
- Cyber Security i.e. in Crime Detections
- Information & Communication Systems i.e. Internet of Things

Smart Cities improve the urban quality of life by making them more connected with technology. This solution is to provide a better living experience by reducing pollution, improving maintenance and escalating the basic architecture of urban planning models to a new trajectory.

Benefits of A Smart City

Nowadays, almost everything is automated**.**

A Smart City is a digital revolution where every domains of the city are connected and correlated using different technologies to provide best services to its citizens.

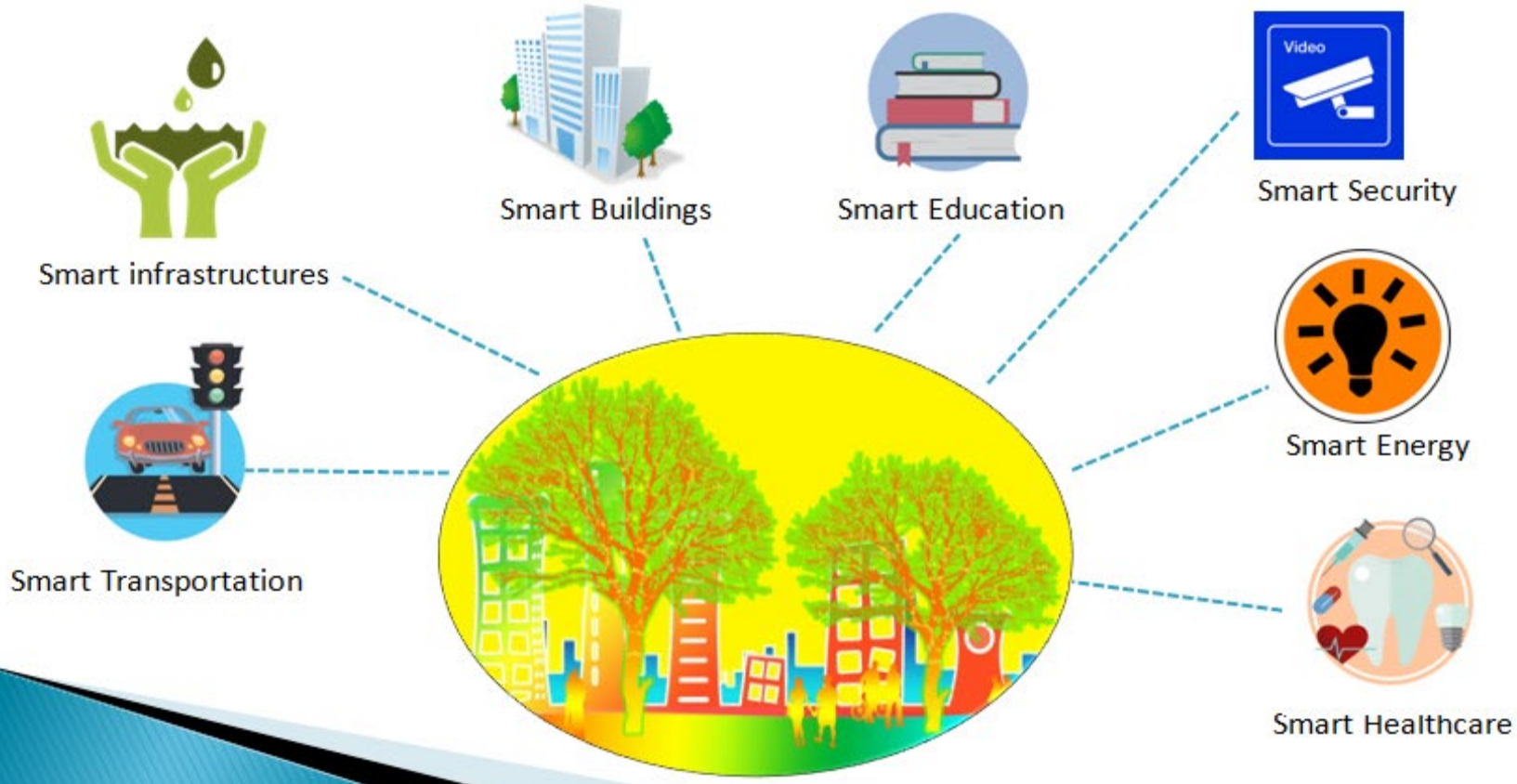

Empowering The Internet of Things To Realize Smart City

It's all about digitization to connects devices, machines and people to combine industrial Ethernet and industrial internet or what we now known as 'Industrial Internet of Things'.

To summarize, Smart City is comprised of the following criteria:

- ✓ E-Government
- ✓ Artificial Intelligence in infrastructure
- ✓ Big Data Analytics
- ✓ Data-Driven O&M
- ✓ Intelligent Asset Management
- ✓ IoT and Machine learning
- ✓ Smart Transportation
- ✓ Smart Energy
- ✓ Smart Environment
- ✓ Smart Buildings
- ✓ Smart Lighting and many more….


Open Data
Smart Energy
Gas & Water
Leak Detection
Smart Home
Traffic Management
Waste Management
Electric Vehicle Charging
Internet of Things
Smart Street Lights
Smart Environment
Smart Packing
Electromagnetic
Emissions
Water Quality
Public safety
Smart Bulidings
Intelligent shopping
Education

Converged Infrastructure & Solutions

Converged infrastructure and **Solutions** pave way to enable the Smart City initiatives.
Smart City deploy emerging technologies such as Internet of Things, Artificial Intelligence, Big Data Analytics, Advanced Robotics and more.

People, information technology, infrastructure devices are optimized together to automate this concept into reality.

CTC union

10G Core Switch

- 1GbE/10GbE product portfolio
- 24+4, 24+8 solutions
- Up to 24 IEEE802.3at PoE ports
- Up to 28 SFP GbE fiber ports
- Supports 14 μ-Ring instance in one switch

4G LTE Series

Router/Gateway

- 2 SIM slot for failover redundancy
- GNSS: GPS/GLONASS/Galileo
- LAN, DI/DO, RS-232/485 Serial Interface
- IPsec VPN/Modbus RTU/TCP, Real-COM
- IEEE802.11b/g/n/ac
- Routing: RIP1/RIP2, OSPF, VRRP

SyncE Switch

- Build-in TCXO for transference of synchronization signal
- Physical layer Synchronous Ethernet supported
- Precision Time Protocol IEEE 1588-2008 (v2 PTP) supported
- ITU-T G.8262, G.8264 compliant
- 8ports 30W PoE model available.
- Provide 4KV surge Protection for Ethernet port

Management Software

SmartView™ & SmartConfig™

PoE Series

Switch/Converter/Lan Extender/Injector

- Ultra PoE++ 60W Solution
- 4KV Surge protection
- LAN extend up to 1.2Km with PoE power feeding
- 24VDC power booster and regulate power output
- Product range of Switch, Converter, Extender and Injector

IEC 61850-3 Switch

- IEC 61850-3 and IEEE 1613 compliant
- u-Ring and STP/RSTP/MSTP/ERPS for network redundancy
- Easy network management by web browser, CLI, Telnet/ serial console and Windows utility.
- Wide 110/220VDC/VAC power supply range and 24/48 VDC redundant power inputs
- Modbus TCP, LLDP, RADIUS,TACACS+, QoS, IGMP snooping, IEEE 802.1X, HTTPS, SNMPv3, and SSH supported
- -40 to 85°C operating temperature range

Serial Connectivity Series

FieldBus/Binary/Transducer

- Modbus RS232/422/485 and Profibus RS485 to fiber converter
- Support one fiber or dual fiber redundancy.
- Redundant power input
- Auto baud rate from 9.6Kbps to 12Mbps
- Device failure isolation
- 2.5 KVrms isolation for serial port

EN 50155 Switch

- EN 50155 Certified
- IEC 61375 TTDP
- Auto-bypass for failover
- Power input range 24 to 110VDC
- IEEE 802.3at PoE 8/12/16-port product portfolio
- M12 connector, IP64/IP67 rugged design

Certification

- CE/FCC
- **UL 60950-1**
- EN 50155
- **EN 50121-4**
- IEC 61850-3
- **EN 61000-6-2**
- EN 61000-6-4
- NEMA TS2

Redundant Ring

- μ-Ring
- **ITU-T G.8032**
- 802.1d STP
- **802.1w RSTP**
- 802.1s MSTP

EMS Industrial Grade

- EN 61000-4-2 ESD Level 3
- **EN 61000-4-3 RS Level 3**
- EN 61000-4-4 EFT Level 3
- **EN 61000-4-5 Surge Level 3**
- EN 61000-4-6 CS Level 3

Temperature

- Wide Temperature Models Available

Rugged Mechanical

- **Vibration** IEC 600068-2-6
- **Free Fall** IEC 600068-2-32
- **Shock** IEC 600068-2-27

High MTBF & 5 Years Warranty

- Industrial Grade Component
- Fanless

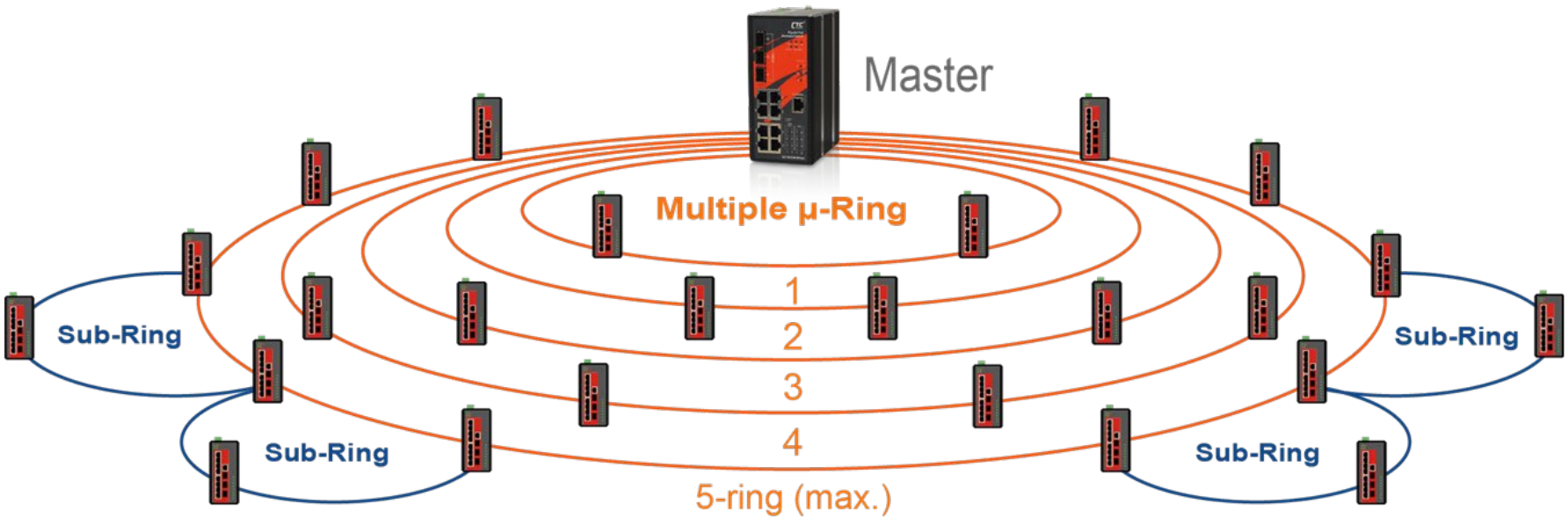

Up to 250 devices per ring

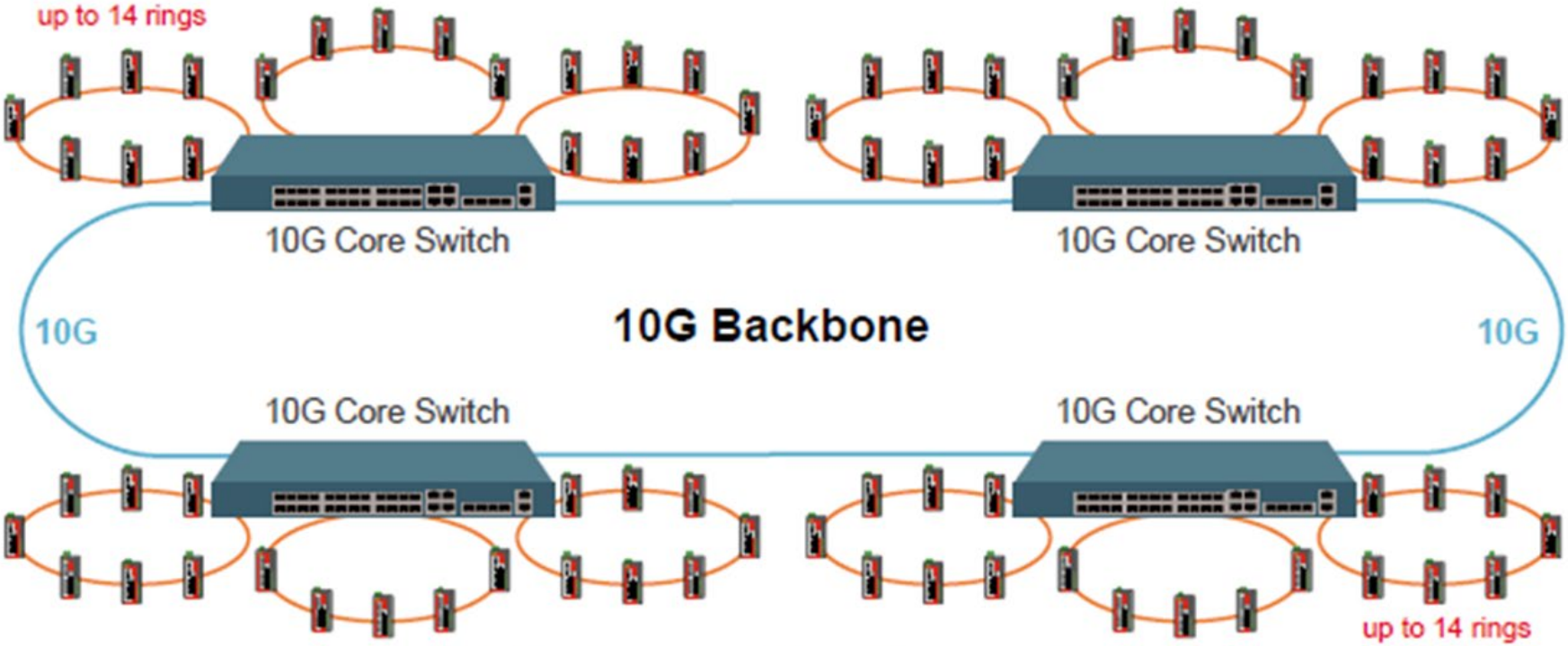

10G Backbone with u-Ring topology

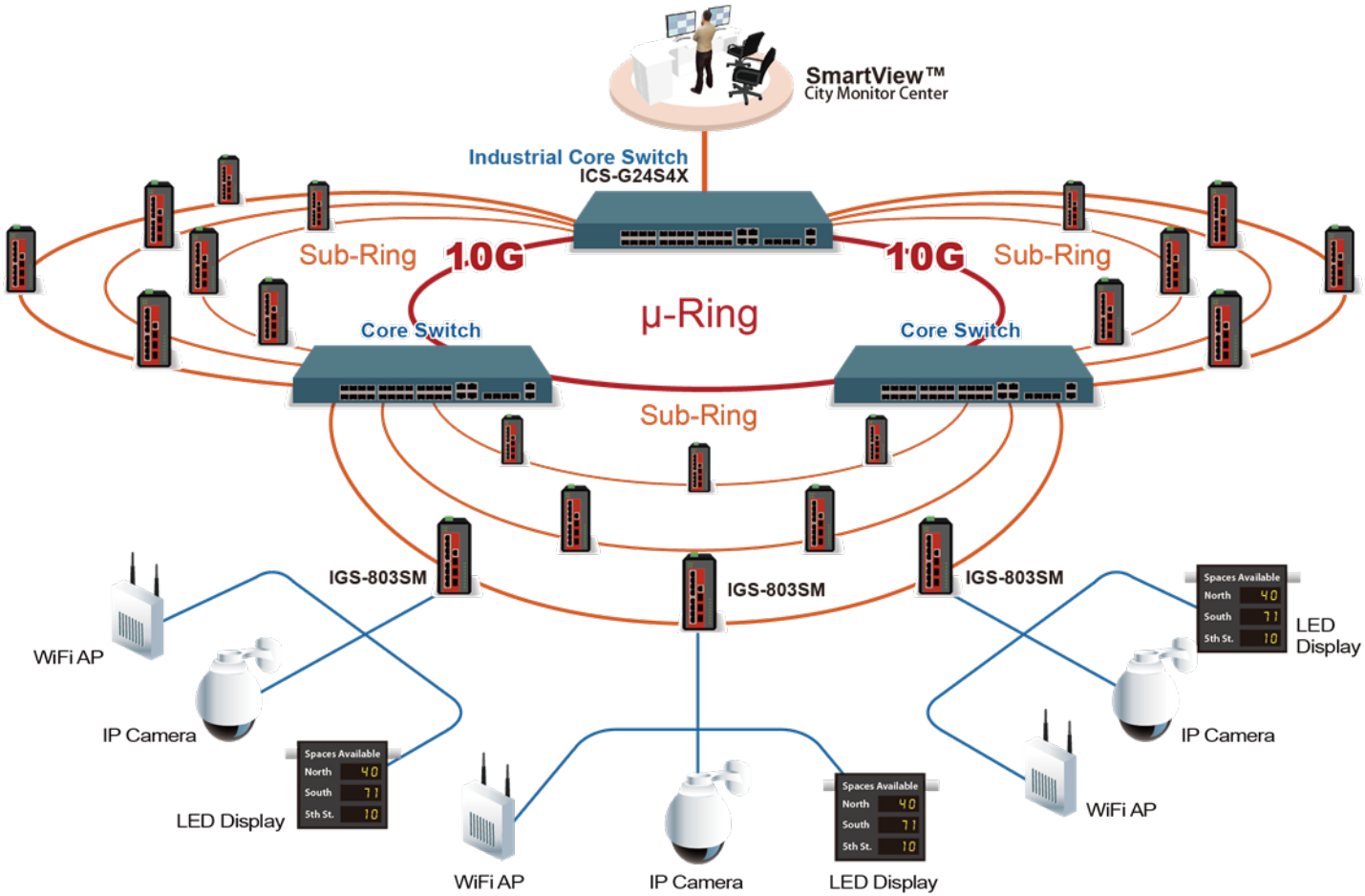
SmartView™
City Monitor Center
Industrial Core Switch
ICS-G24S4X
Sub-Ring
10G
10G
Sub-Ring
μ-Ring
Core Switch
Core Switch
Sub-Ring
IGS-803SM
IGS-803SM
IGS-803SM
WiFi AP
IP Camera
LED Display
Spaces Available
North 40
South 71
5th St. 10
WiFi AP
IP Camera
LED Display
Spaces Available
North 40
South 71
5th St. 10
WiFi AP
IP Camera
LED Display
Spaces Available
North 40
South 71
5th St. 10

■ Remote PD Auto Test & Reset

- PoE PD failure auto checking, and auto reset when PD fail.
- The feature helps to **reduce operational expenses**.

■ Weekly PoE ON/OFF Scheduling

- Offer weekly PoE ON/OFF scheduling function to provide PoE to PDs
- Reduce operational expenses.

Ethernet przemysłowy w aplikacjach Smart City

What Makes Transportation Smart..?

Smart transportation is the basis of smart infrastructure such as multi-modal connection and data integration. This can include Real-time traffic data, Automated traffic signals, tolls and fare collection, Smart parking and vehicle locating systems, Passenger information, Incident management etc.

1 Infrastructures

Multi-modal Transport

Automated fare collection

Automated Signals

Electric vehicles charging

2 Data Integration

Data collection & integration

Weather Forecast

Traffic Forecast

Driver Monitoring System

3 Smart Information

Passenger Information System

Traffic Signal Control

Incident Management & Monitoring

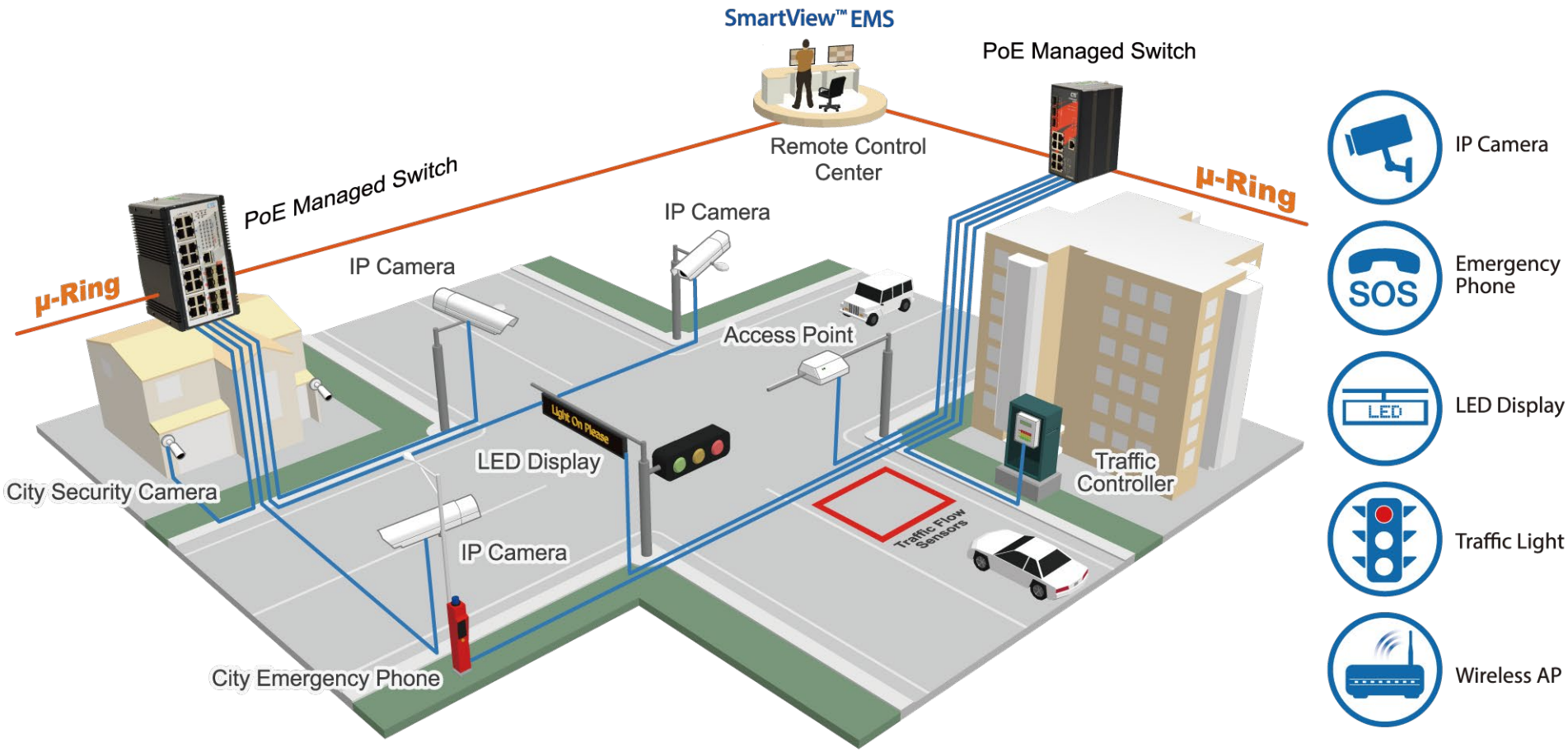
SmartView™ EMS
Remote Control Center
PoE Managed Switch
PoE Managed Switch
μ-Ring
μ-Ring
IP Camera
IP Camera
Access Point
LED Display
Light On Please
City Security Camera
IP Camera
City Emergency Phone
Traffic Flow Sensors
Traffic Controller
IP Camera
Emergency Phone
SOS
LED Display
LED
Traffic Light
Wireless AP

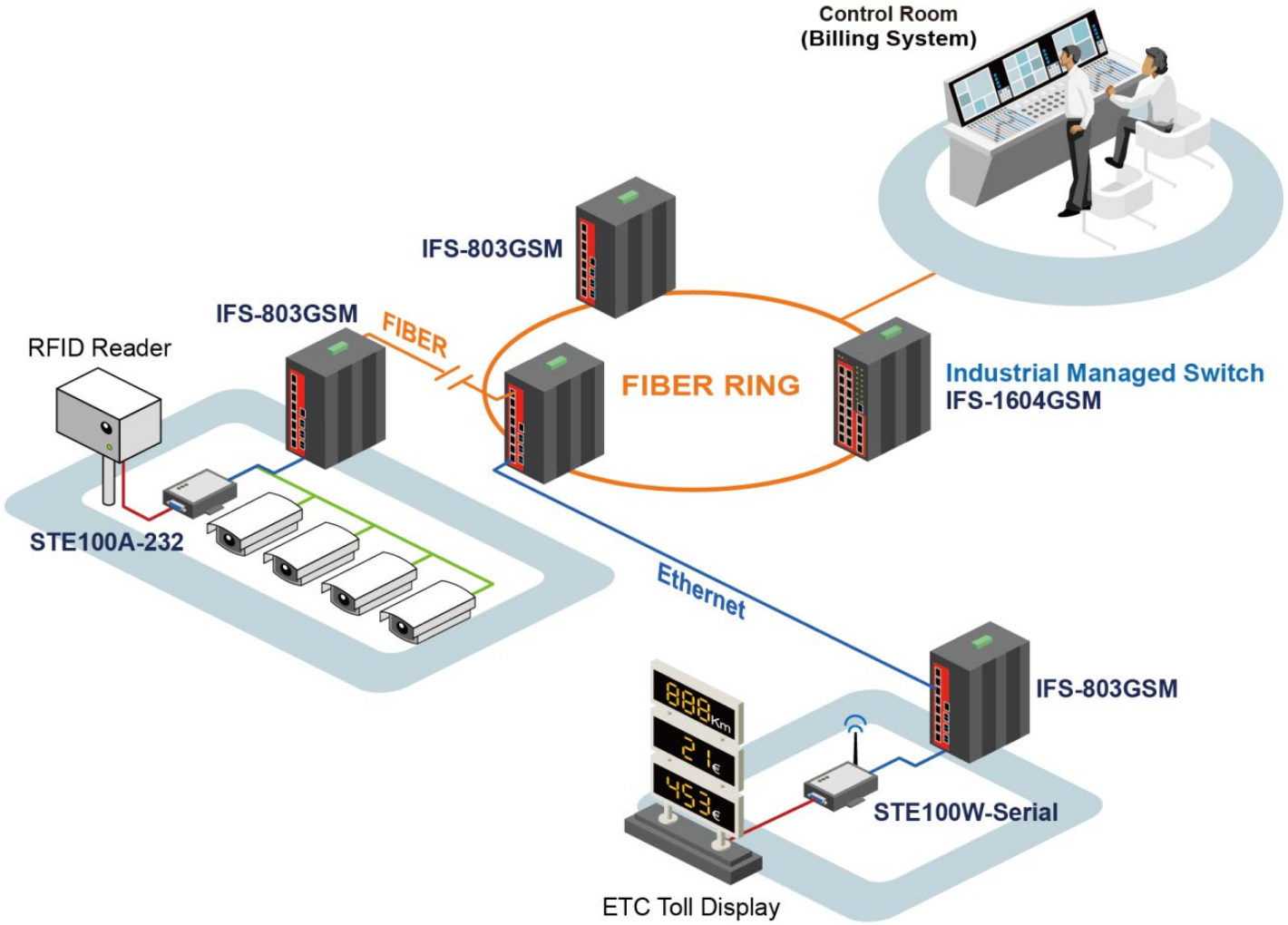
Control Room
(Billing System)
IFS-803GSM
IFS-803GSM
FIBER
RFID Reader
FIBER RING
Industrial Managed Switch
IFS-1604GSM
STE100A-232
Ethernet
IFS-803GSM
STE100W-Serial
ETC Toll Display

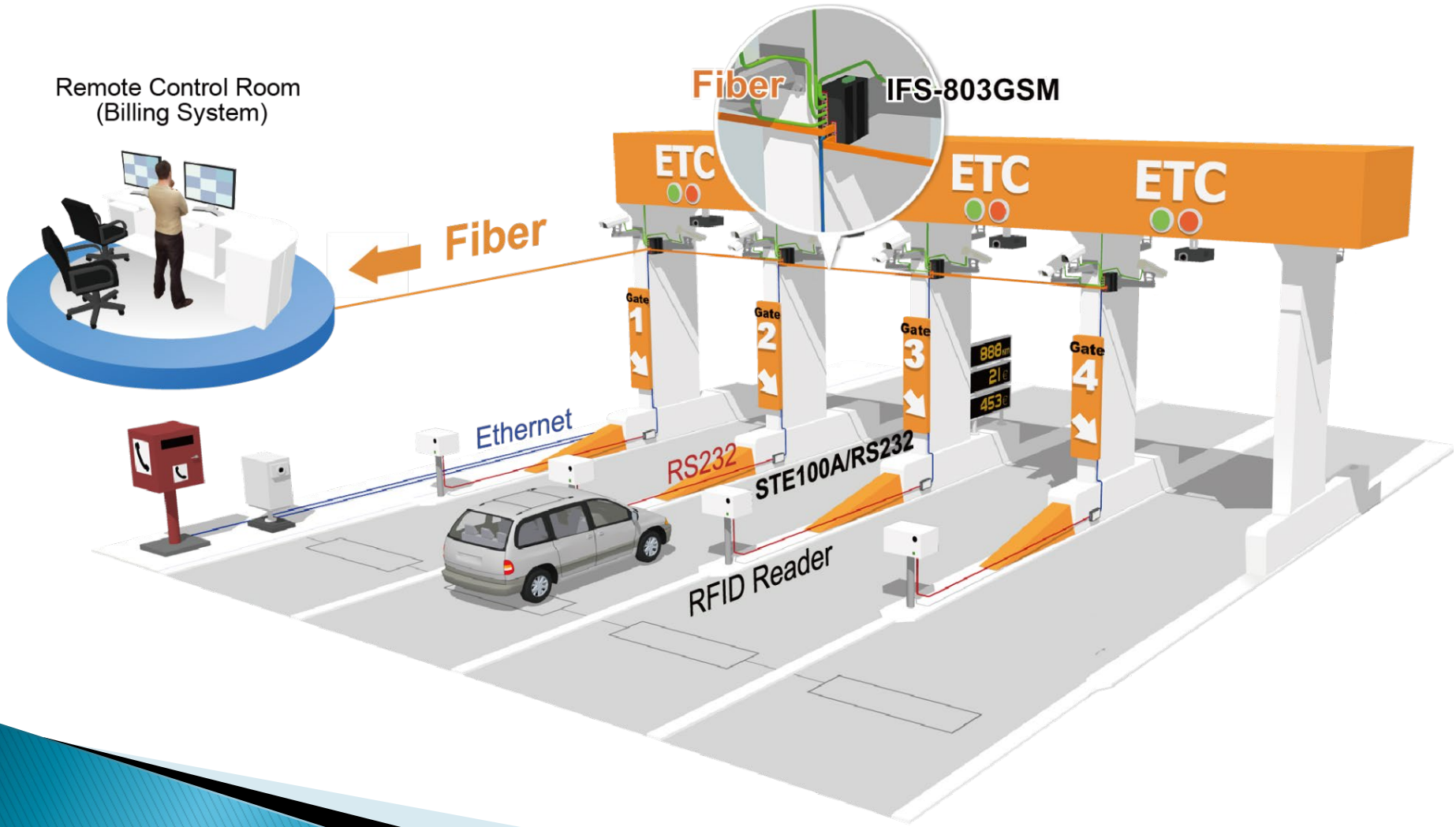
Remote Control Room
(Billing System)
Fiber
Fiber
IFS-803GSM
ETC
ETC
ETC
Gate 1
Gate 2
Gate 3
Gate 4
Ethernet
RS232
STE100A/RS232
RFID Reader

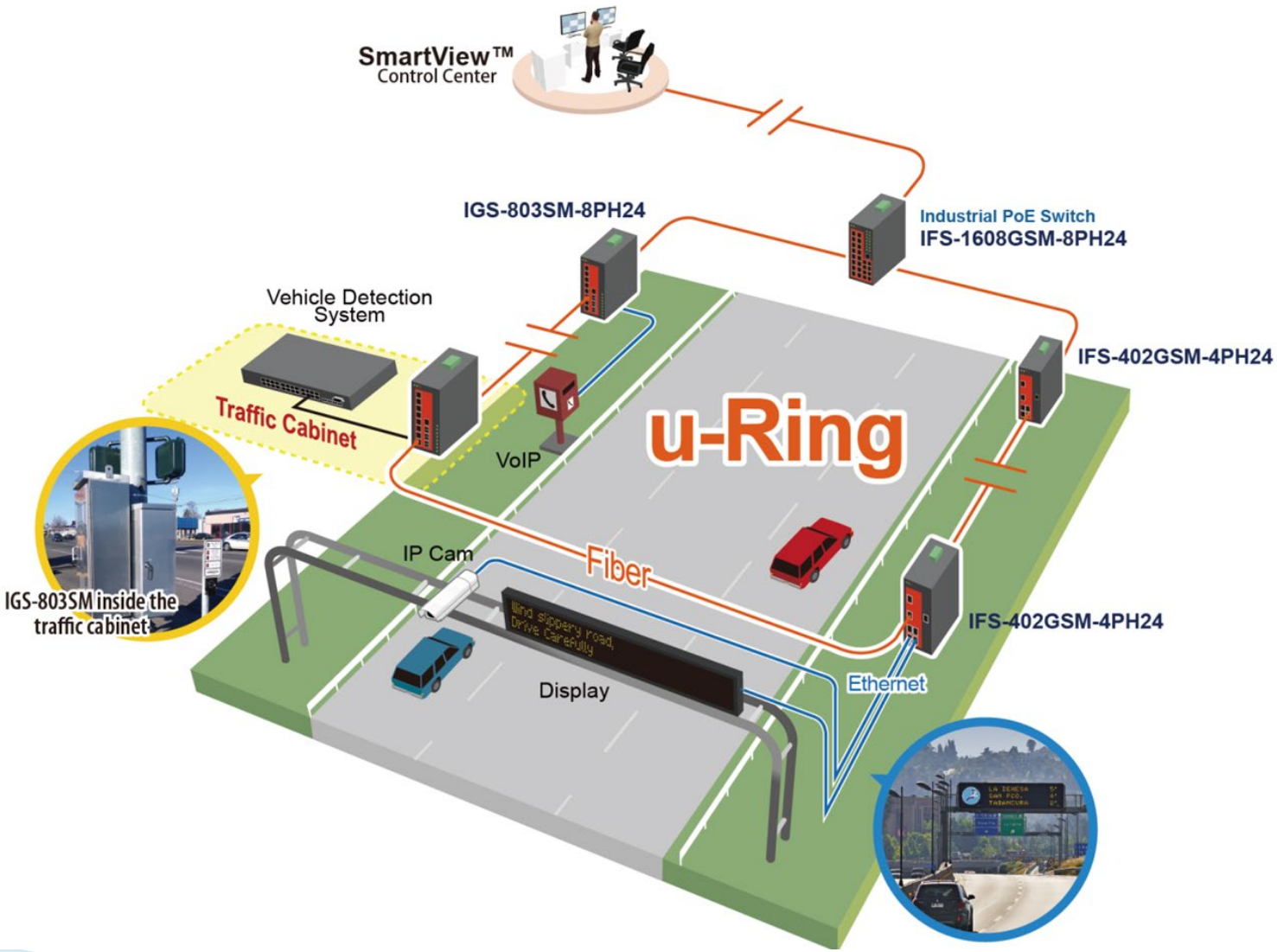
SmartView™
Control Center
IGS-803SM-8PH24
Industrial PoE Switch
IFS-1608GSM-8PH24
Vehicle Detection
System
Traffic Cabinet
IFS-402GSM-4PH24
u-Ring
VoIP
IP Cam
Fiber
IGS-803SM inside the
traffic cabinet
IFS-402GSM-4PH24
Ethernet
Display

Smart City/Smart Bus

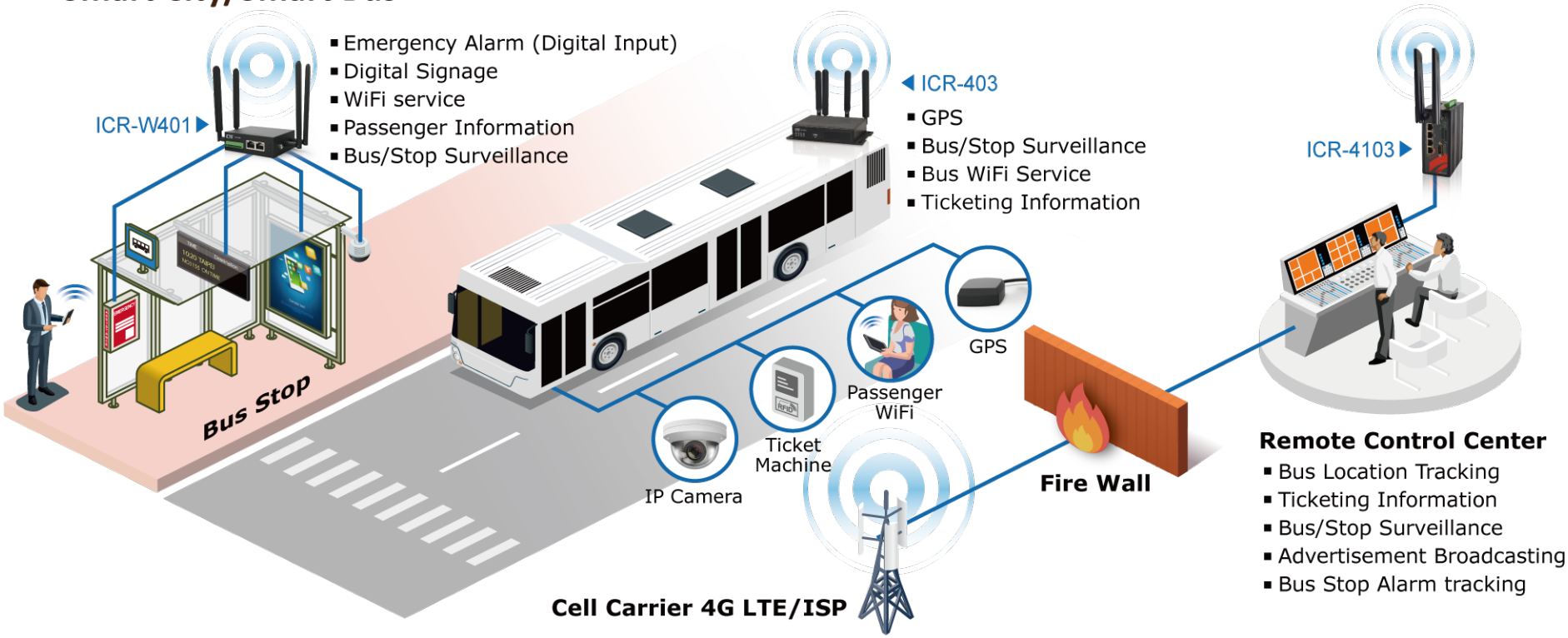

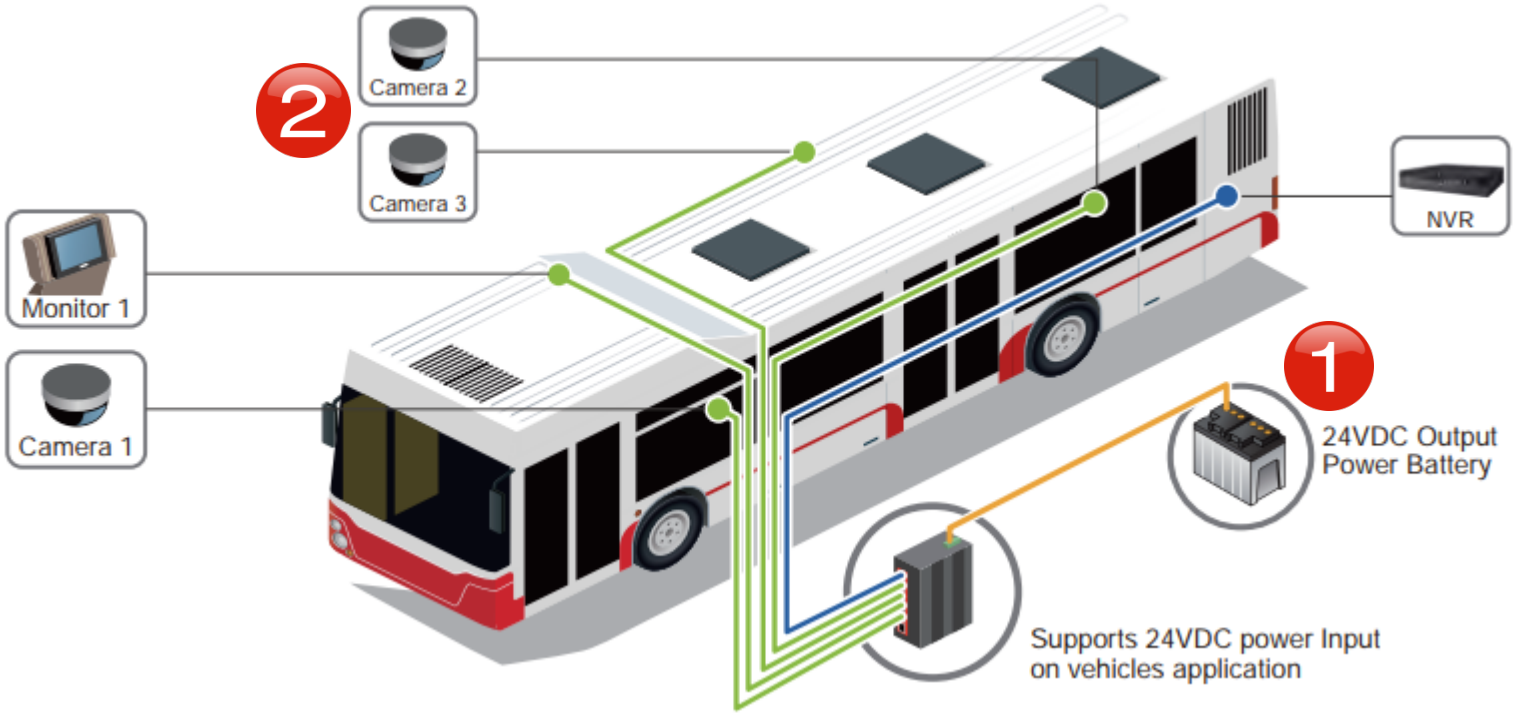
2
Camera 2
Camera 3
Monitor 1
Camera 1
NVR
1
24VDC Output
Power Battery
Supports 24VDC power Input
on vehicles application

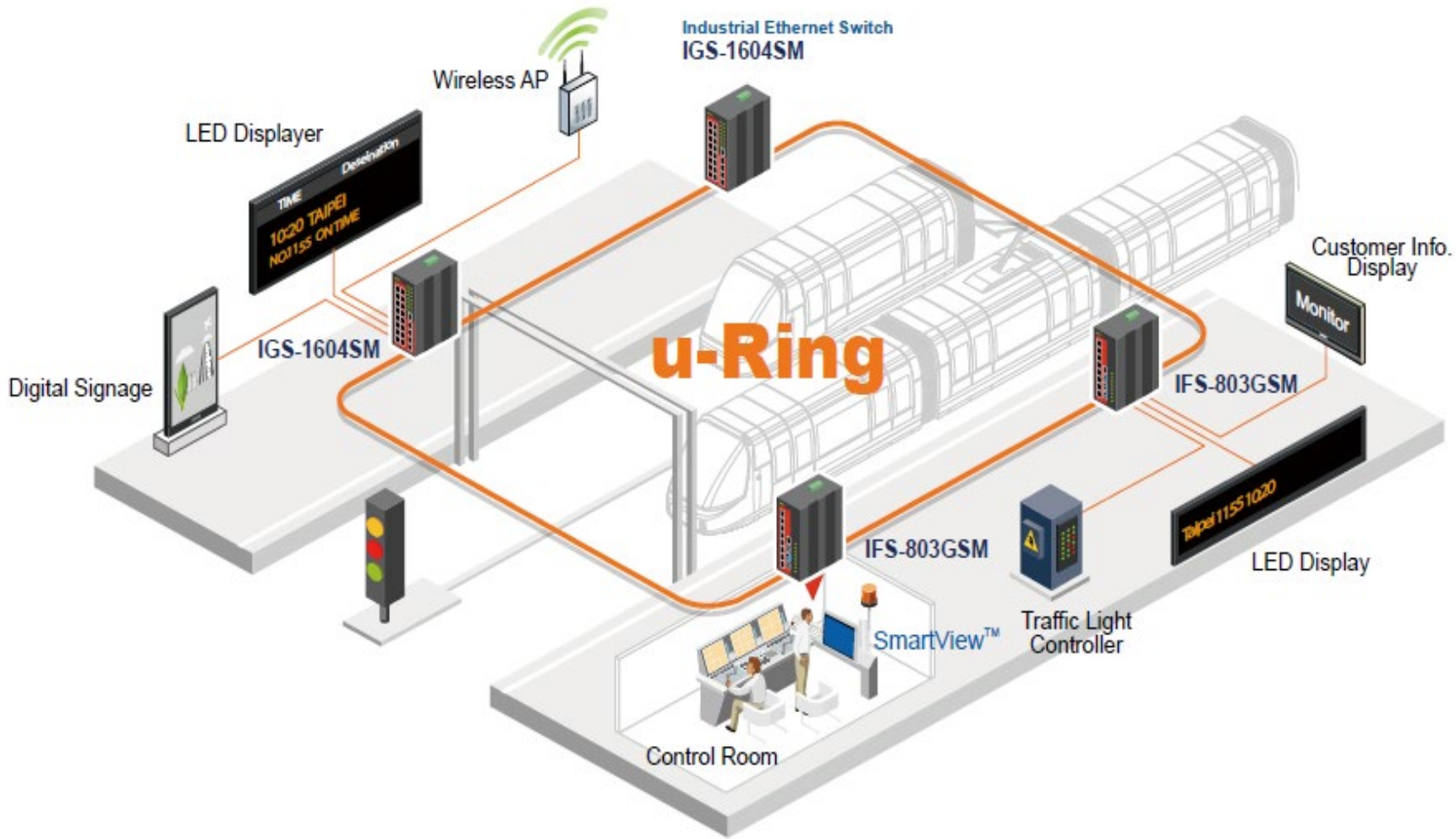
Industrial Ethernet Switch
IGS-1604SM
Wireless AP
LED Displayer
TIME
Destination
1020 TAIPEI
NO1155 ONTIME
Digital Signage
IGS-1604SM
u-Ring
Customer Info. Display
Monitor
IFS-803GSM
IFS-803GSM
Taipei1155 1020
LED Display
Traffic Light Controller
SmartView™
Control Room

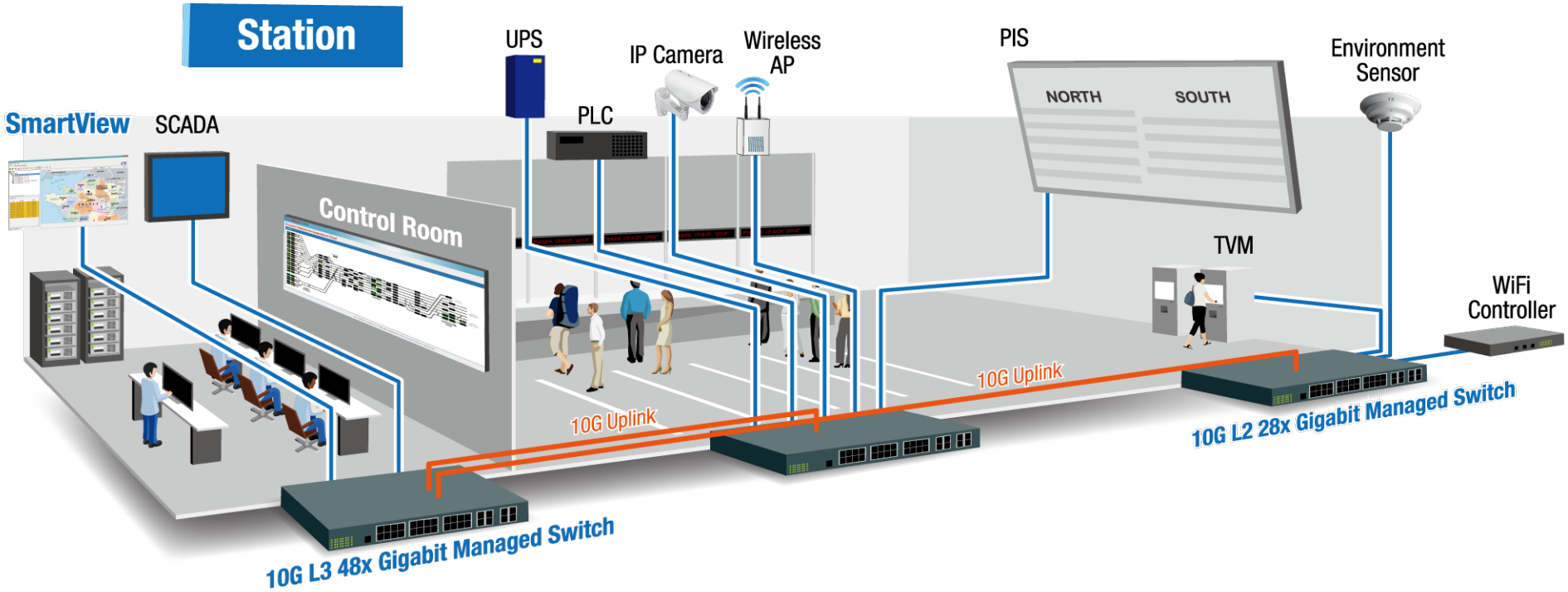
Station
SmartView
SCADA
Control Room
UPS
PLC
IP Camera
Wireless AP
PIS
NORTH
SOUTH
Environment Sensor
TVM
WiFi Controller
10G Uplink
10G Uplink
10G L3 48x Gigabit Managed Switch
10G L2 28x Gigabit Managed Switch

Network Diagram

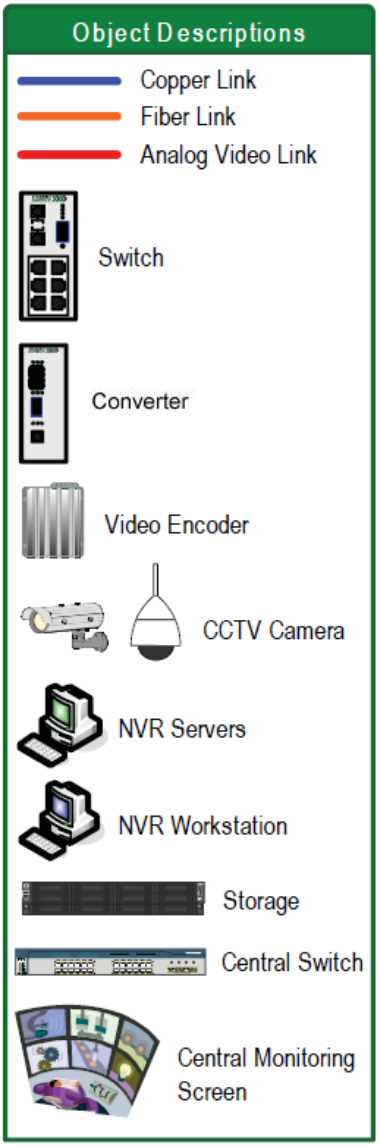

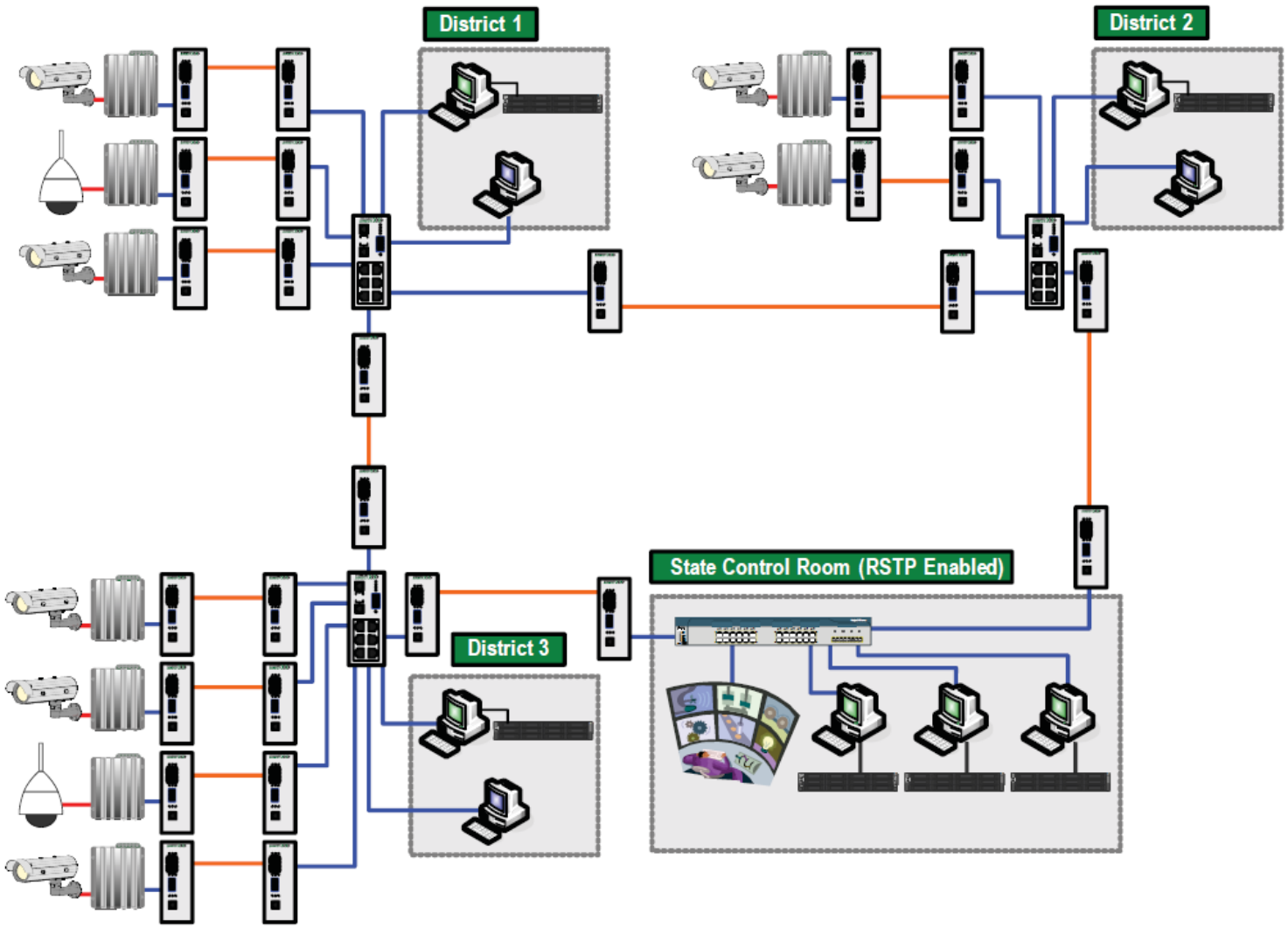

What Is Smart Grid and Smart Energy..?

Grid refers to substations that deliver electricity from the power plant to your home or business. Smart grid comprising smart meters, smart appliances, renewable energy and energy efficient solutions.

Digitalization is what makes it a smart grid which consist of controls, computers, automation, and new technologies and equipment working together.

Smart Energy generation can be classified according to the primary energy sources such as fossil fuels, renewable, and nuclear. Irrespective of the energy source, power plants are expected to be safe, efficient, reliable, and responsive to consumer demands. The use of automation and control systems help ensure that power plants meet or surpass these criteria.

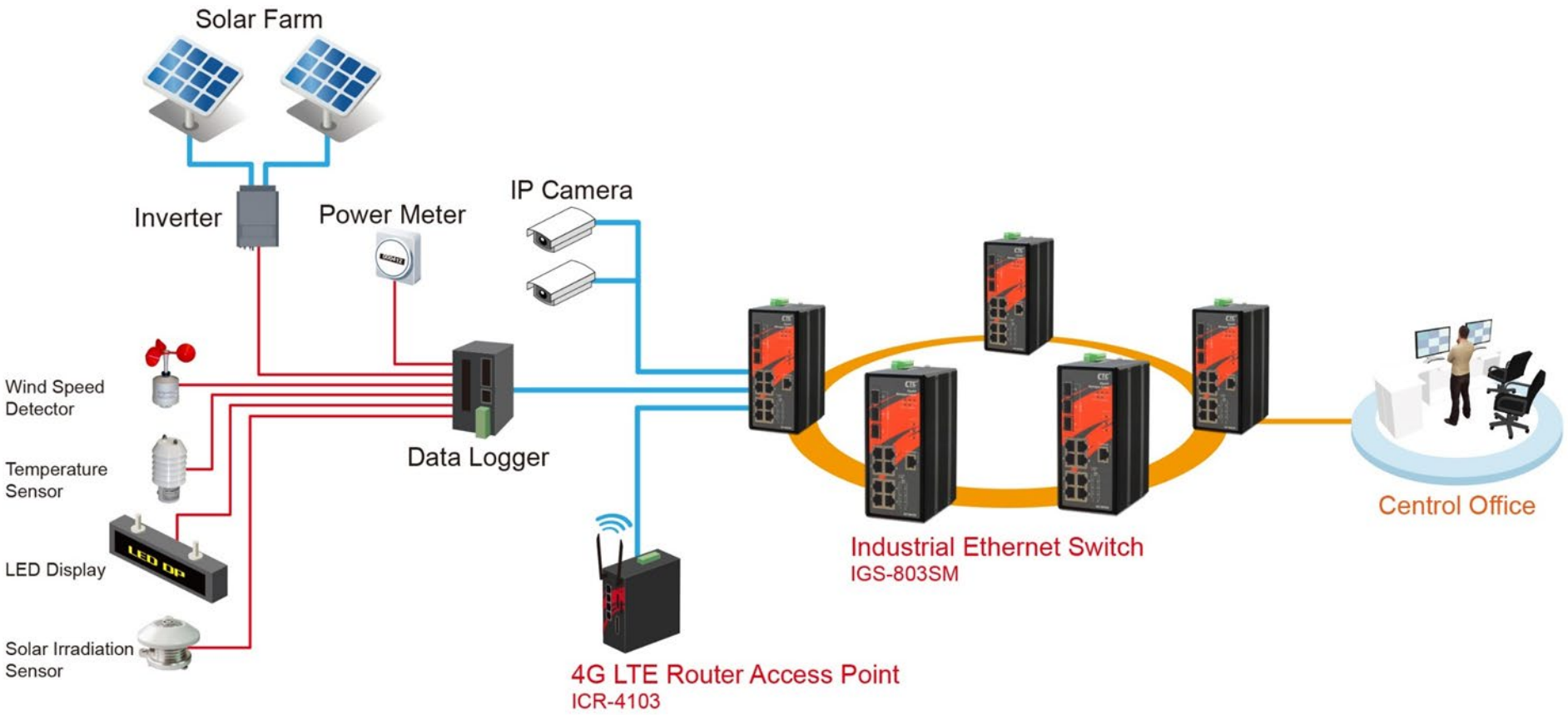
Solar Farm
Inverter
Power Meter
IP Camera
Wind Speed Detector
Temperature Sensor
LED Display
Solar Irradiation Sensor
Data Logger
4G LTE Router Access Point
ICR-4103
Industrial Ethernet Switch
IGS-803SM
Centrol Office

Network Diagram

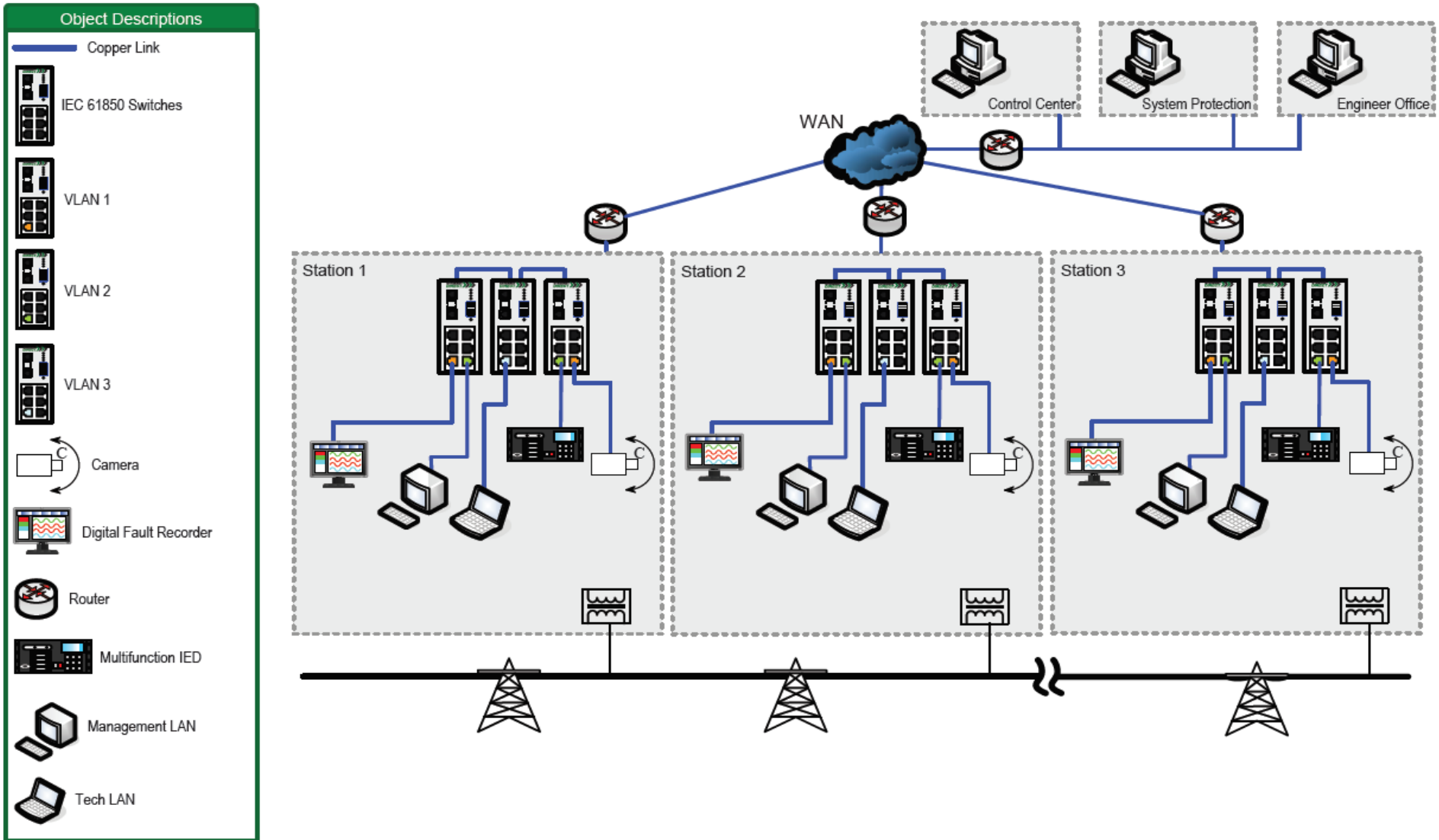

What Is Smart Building..?

The new digital technologies enable smart building trends to improve operational efficiency which include Energy Management, Occupant Services, Facility Management and Safety & Security.

Smart building infrastructure connects people, processes, data and things with integrated network solutions. Modern communication technologies and smart metering enable TIMELY information on the status of the distribution networks. Smart Buildings and the Internet of Things (IoT) is now becoming the conceptual basis for smart building integration. The IoT concept builds on monitoring, telemetry, sensor-based computing, machine-to-machine and IP-based communications.

Building Automation

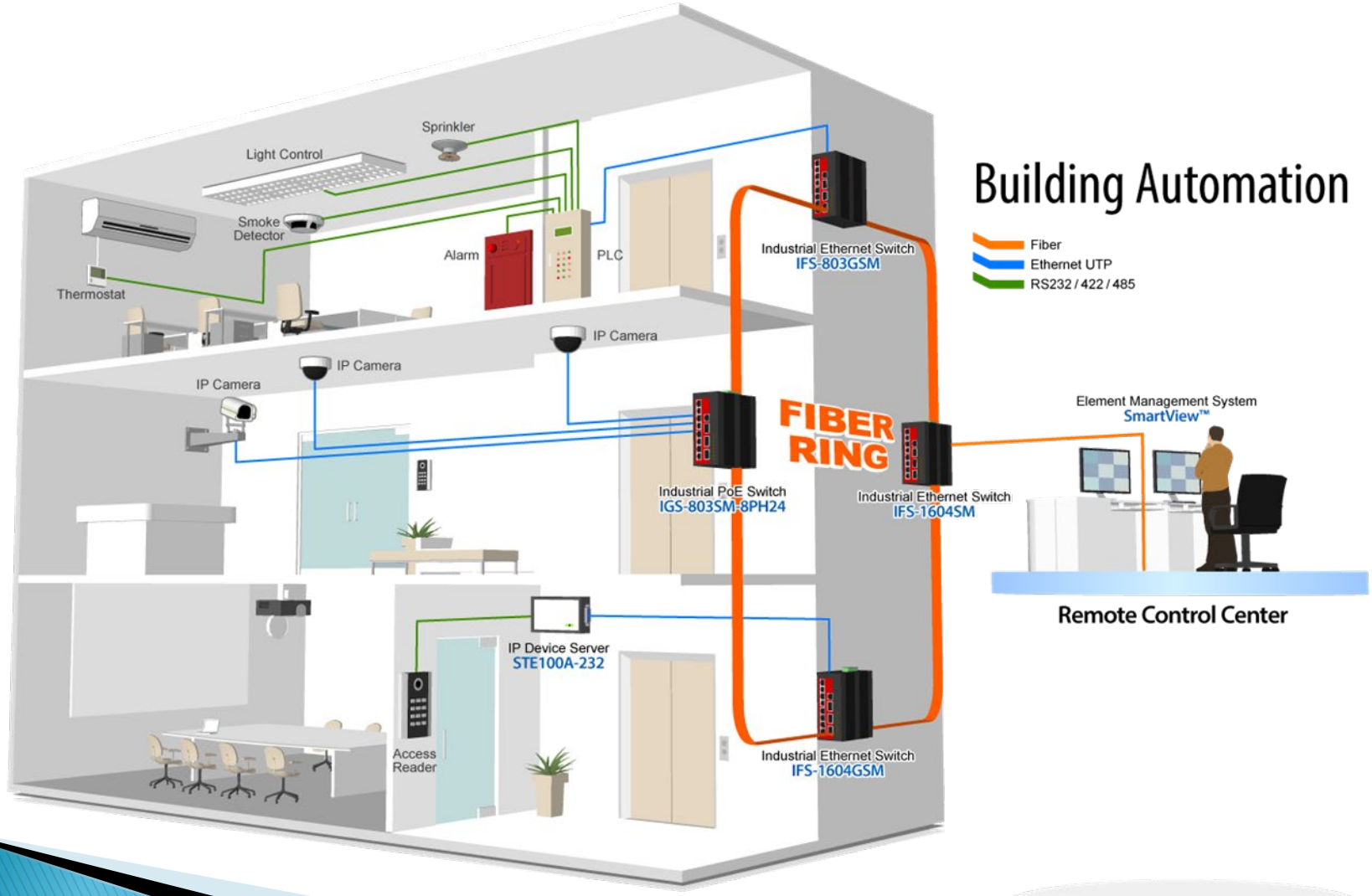

Network Diagram

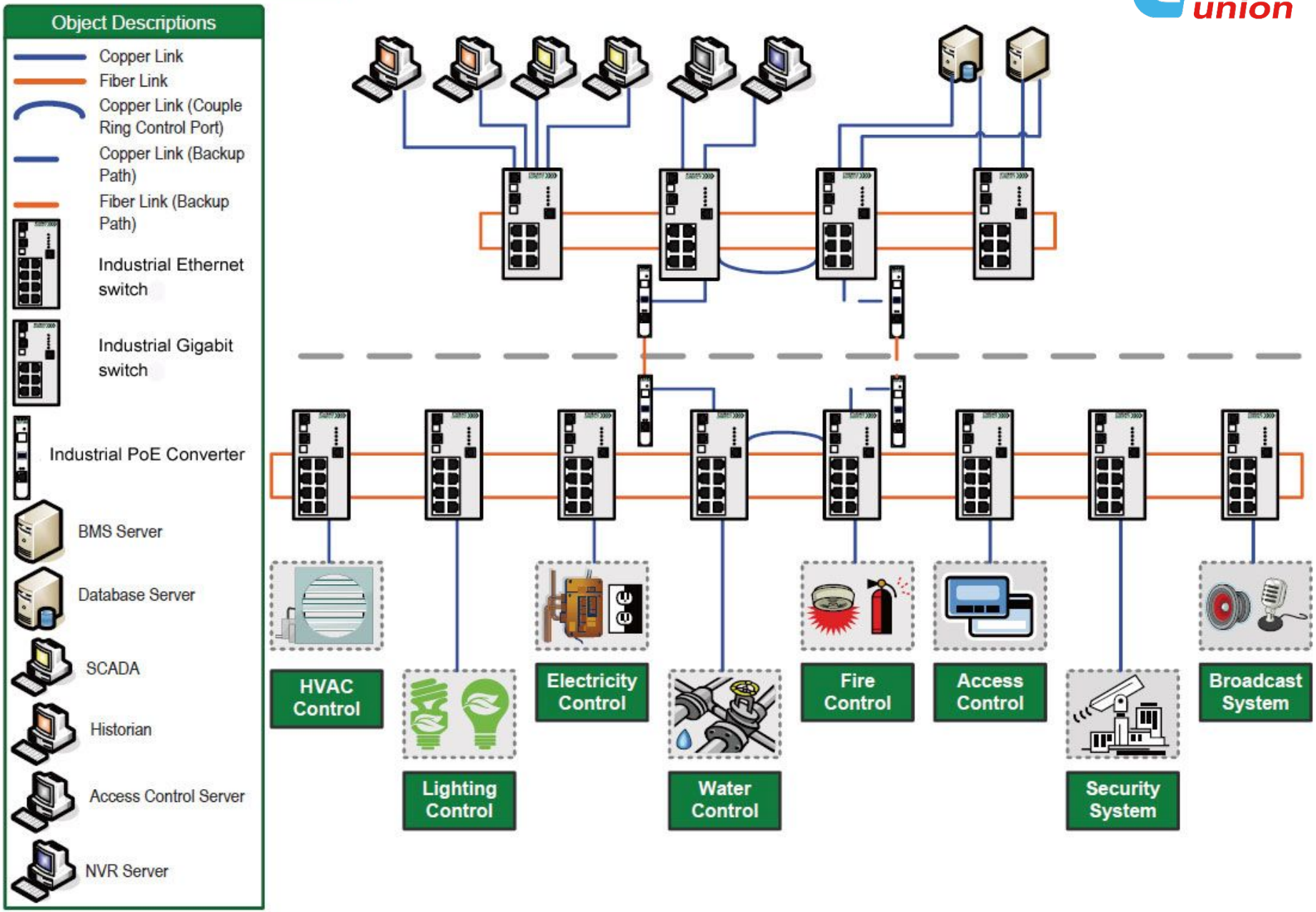

What Is Smart Security & City Surveillance

Building A Secured & Scalable IP Surveillance Network

IP surveillance has become one of the future-proof options for safety and surveillance applications. To address the growing demand in IP surveillance networks, Power over Ethernet capability enables PD devices such as surveillance cameras or wireless access points to be powered over standard twisted-pair Ethernet cable, eliminating the needs for requiring external power for PD devices.

Enabling smart security ensures public safety and a better tomorrow. It increases the safety of all citizens through smart surveillance system and strengthening emergency response monitoring system.

Applications include city surveillance, border security, homeland security, prison surveillance etc.

Network Diagram

Object Descriptions

- Copper Link
- Industrial Gigabit switch
- Industrial PoE Converter
- CCTV DVR
- Door Gate Controller
- Door Gate
- Multi Door Gate Control
- Cisco Switch
- Cisco Switch
- Servers
- Monitors
- Printer

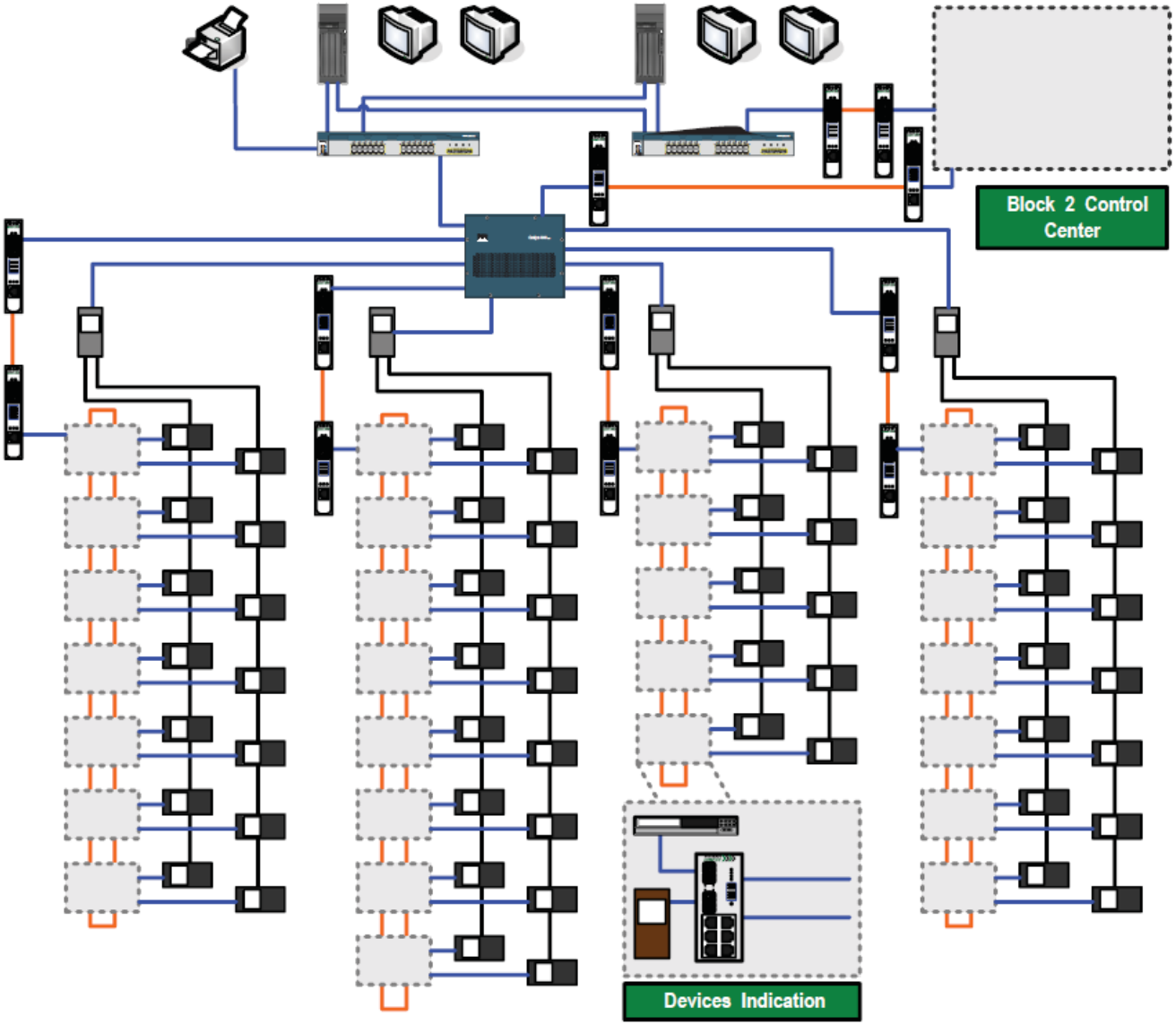

Enabling Smart Infrastructures Such As in Utilities

Smart infrastructures include a smart solution in water and wastewater management.
The results of harnessing advances in digital water technology together with the latest advanced water treatment processes realize operational, economic and environmental sustainability goals in their wastewater plants. Water supply and management with adequate pressure, quality & quantity, and reduce unaccounted for water losses.

Most applications require multi-protocol-enabled interoperability. These devices can be monitored on the SCADA system to enhance manageability of PLC networks.

- Provides flexibility to adapt to different industrial application requirements
- Resilient redundancy to guarantee high performance and network availability
- Take advantage to retain existing legacy devices to minimize cost
- Enhance network interoperability with simplify configuration and manageability

Network Diagram

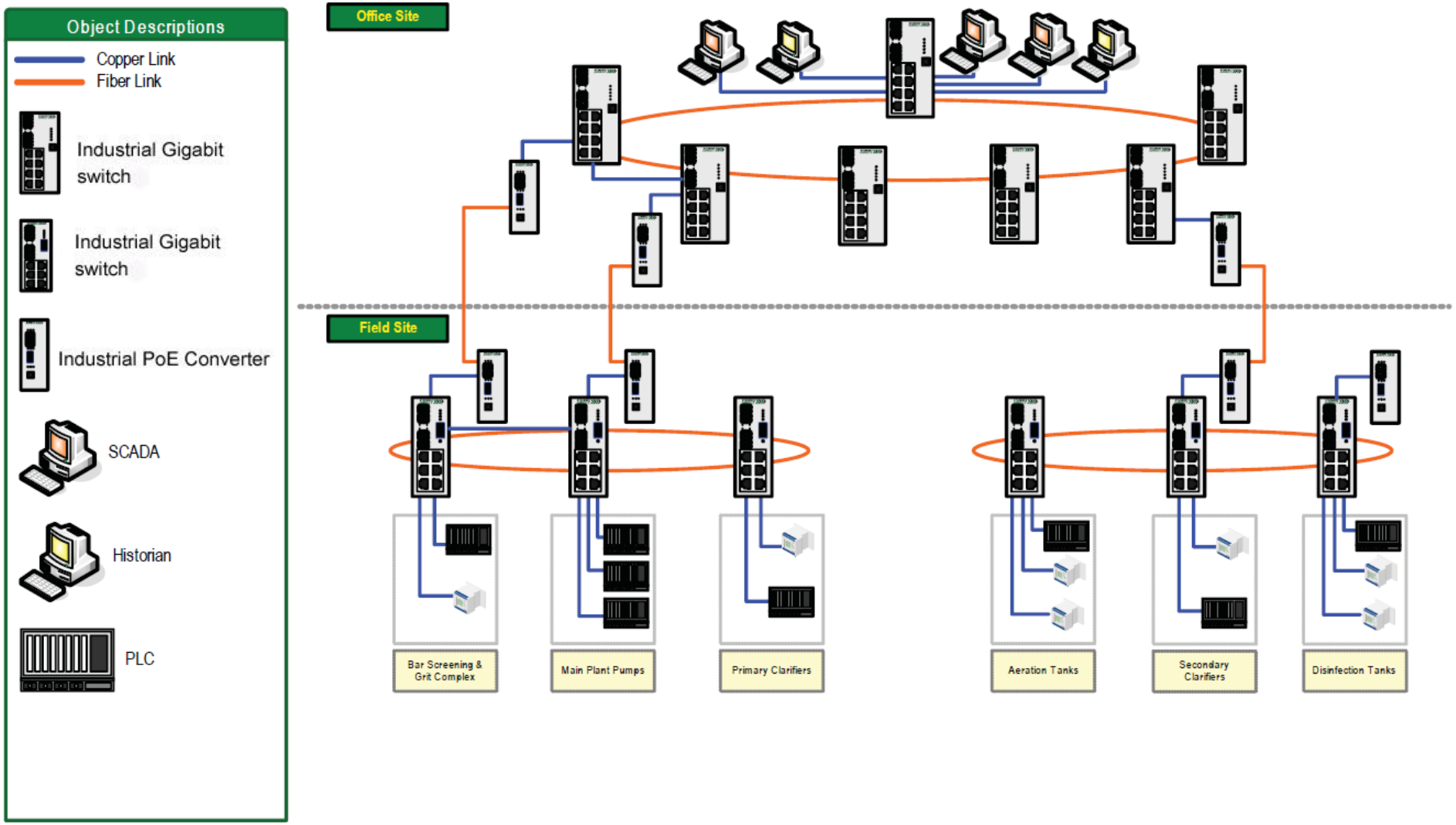

Enabling Smart Healthcare & Smart Education

Smart Healthcare and Smart Education focus on providing services and responsive system in order to increase information accessibility.

Today's healthcare system recognizes the advantages of using Information Technology to improve the quality of healthcare by establishing a health management system, proper emergency response system can provide information to medical shops, doctors and hospitals.

In smart education, the ability to access information online increase digital literacy. It helps to transform static educational contents into interactive lessons via smart learning platform.

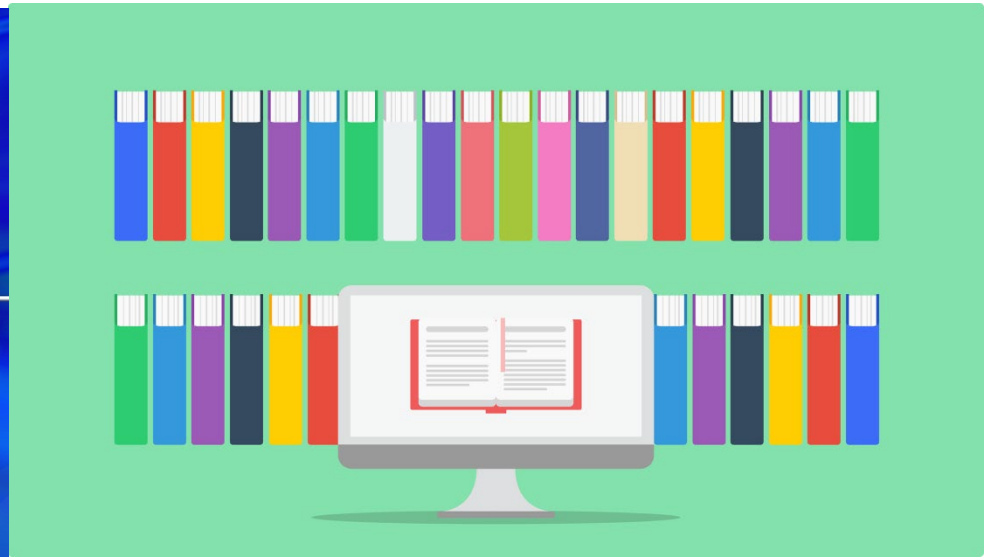

Smart City Involves Big Data Analytics

Smart cities are based on the Information & Communication Technology framework including the Internet of Things technology. These applications require big data analytics in terms of **VOLUME, VARIETY, VELOCITY** and **VERACITY.**

Volume refers to amount of data.
Variety refers to the data from multiple sources.
Velocity refers to real-time data flow and data rate.
Veracity refers to the accuracy of data.

In Smart Cities, data comes from sensors, devices, video/audio, networks, log files, transactional applications, WEB and social media etc.

Much of it is generated in real time and in a very large scale.

Smart City Involves Artificial Intelligence

By deploying artificial intelligence, it helps the city government understand how people use the cities, how to improve infrastructure and optimize resources and lastly, how to improve public safety.

Smart cities are based on intelligent sensors. Data from sensors are processed to create innovative solutions associated with energy, utilities, urban mobility, public safety, air quality, waste management, education, healthcare, etc.

Smart sensors can be found in utility poles, water lines, buses, traffic lights, etc.

In the long term goal, smart city will be about full inter-connectivity, autonomous and a highly connected system with a high degree of safety.

In North America, the federal government is moving towards this reality such as requiring vehicle-to-vehicle communication.

MACHINE LEARNING

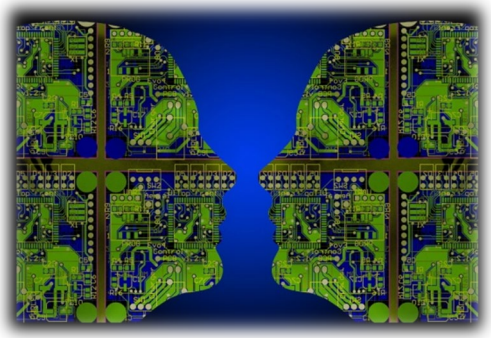

CTC union

The Preferred Choice for Smart City Applications